LEFT VIEW

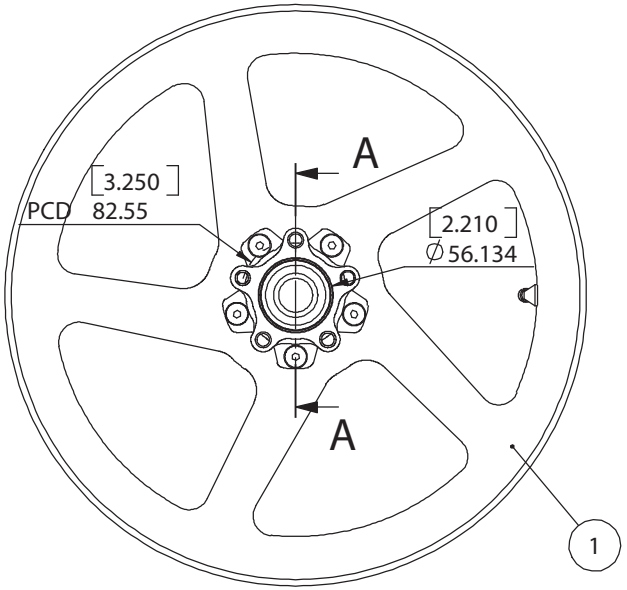

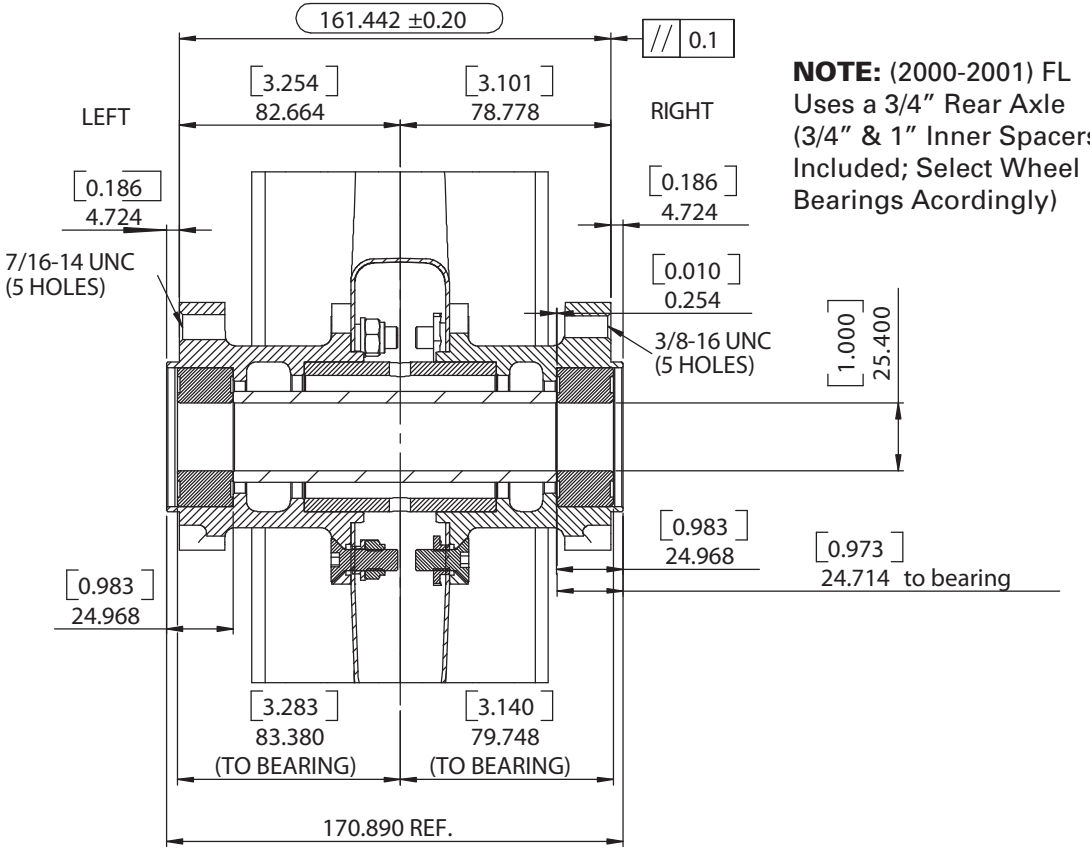

NOTE: (2000-2001) FL Uses a 3/4" Rear Axle (3/4" & 1" Inner Spacers Included; Select Wheel Bearings Acordingly)

A-A (1 : 2)

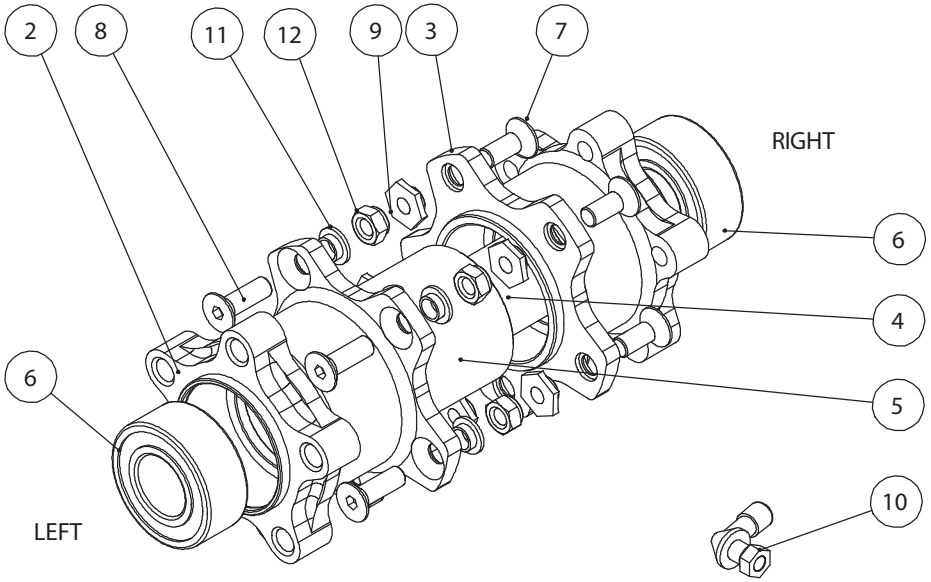

Brock's Performance
4064 E Patterson Rd
Beavercreek, OH 45430
TEL : 937-912-0054
FAX: 937-912-0062

DESCRIPTION

Harley Wide Glide CRW Assembly 16" X 3.5"

DRAWING NO:

33007-7000-16-000